Power Distribution
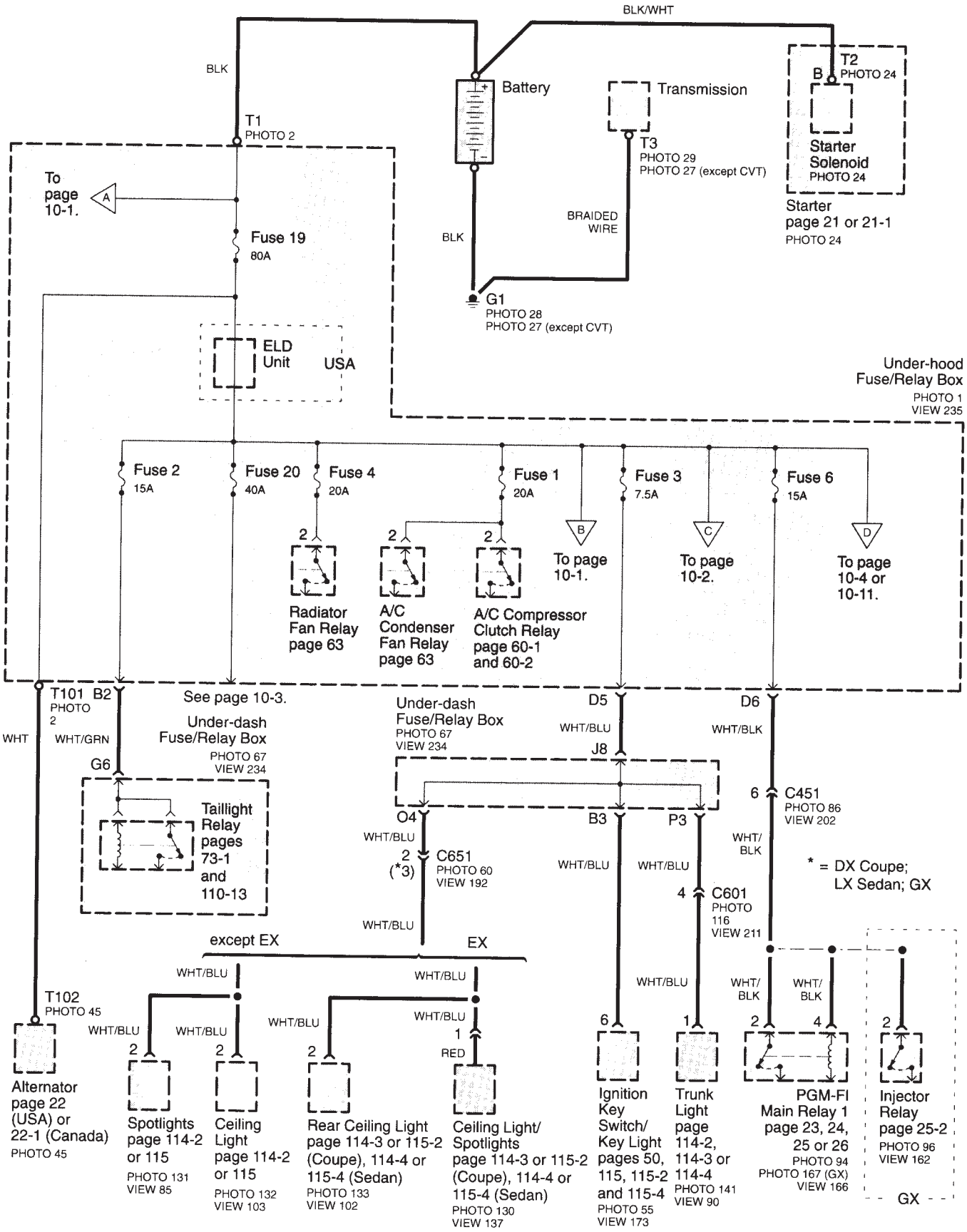
– Under-hood Fuse/Relay Box – Fuses 1, 2, 3, 4, 6, and 19