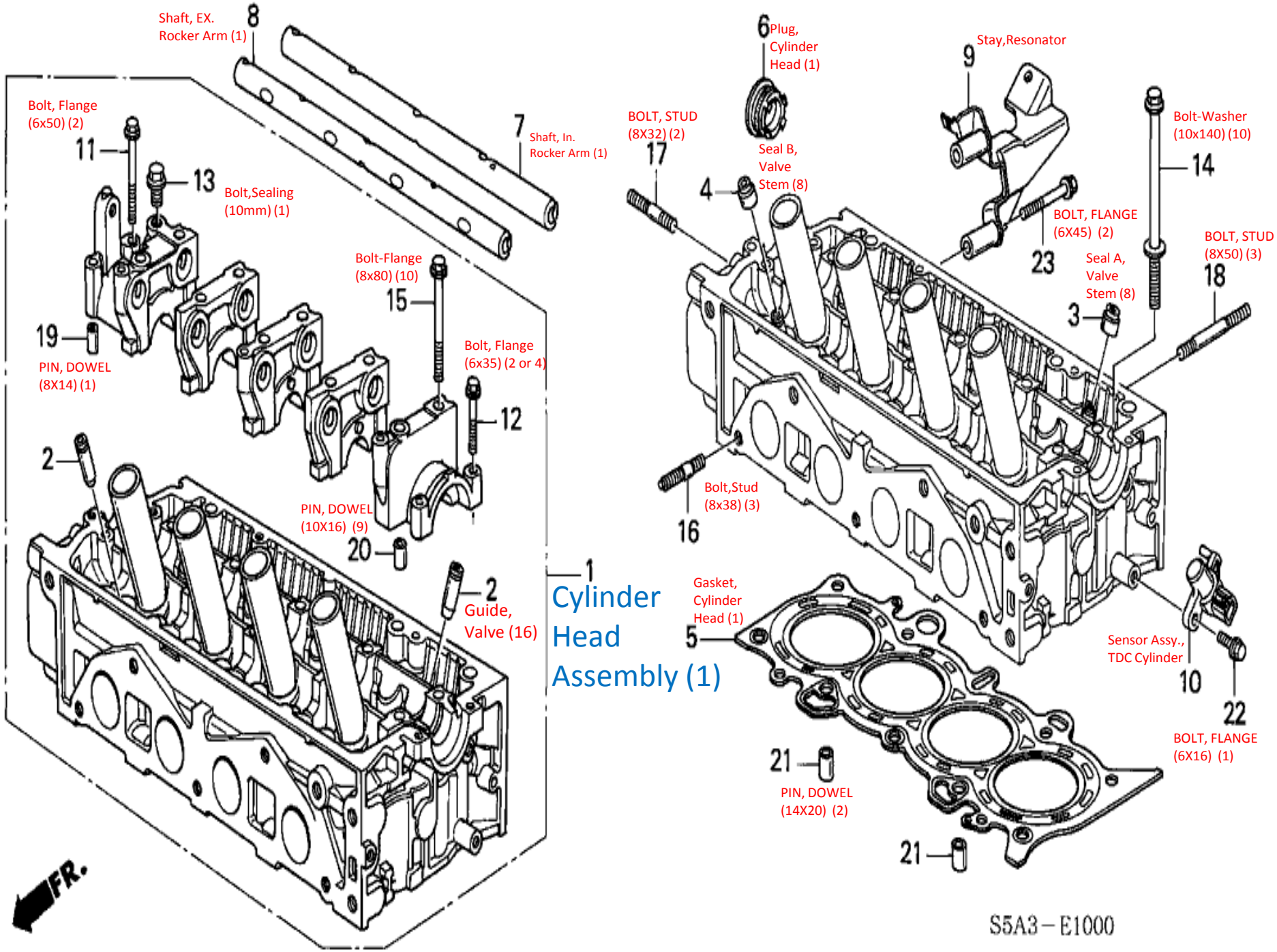
Shaft, EX. Rocker Arm (1)
8
Bolt, Flange (6x50) (2)
11
13
Bolt,Sealing (10mm) (1)
7
Shaft, In. Rocker Arm (1)
Bolt-Flange (8x80) (10)
15
19
PIN, DOWEL (8X14) (1)
Bolt, Flange (6x35) (2 or 4)
12
2
PIN, DOWEL (10X16) (9)
20
2
Guide, Valve (16)
1
Cylinder Head Assembly (1)
FR.
6
Plug, Cylinder Head (1)
BOLT, STUD (8X32) (2)
17
Seal B, Valve Stem (8)
4
9
Stay,Resonator
BOLT, FLANGE (6X45) (2)
23
Bolt-Washer (10x140) (10)
14
BOLT, STUD (8X50) (3)
18
Seal A, Valve Stem (8)
3
Bolt,Stud (8x38) (3)
16
Gasket, Cylinder Head (1)
5
Sensor Assy., TDC Cylinder
10
22
BOLT, FLANGE (6X16) (1)
21
PIN, DOWEL (14X20) (2)
21
S5A3 – E1000