Component Location Index

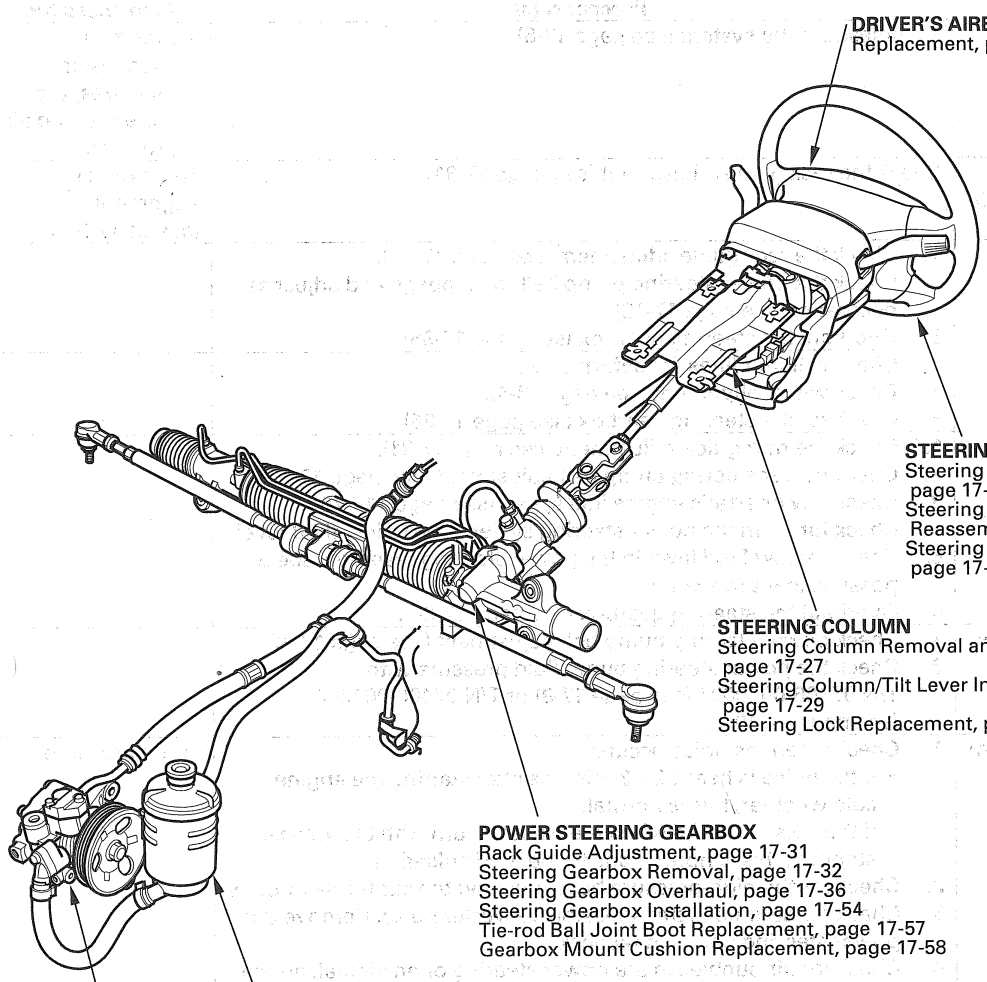

DRIVER'S AIRBAG ASSEMBLY
Replacement, page 23-137

STEERING WHEEL
Steering Wheel Removal, page 17-24
Steering Wheel Disassembly/Reassembly, page 17-25
Steering Wheel Installation, page 17-26

STEERING COLUMN
Steering Column Removal and Installation, page 17-27
Steering Column/Tilt Lever Inspection/Adjustment, page 17-29
Steering Lock Replacement, page 17-30

POWER STEERING GEARBOX
Rack Guide Adjustment, page 17-31
Steering Gearbox Removal, page 17-32
Steering Gearbox Overhaul, page 17-36
Steering Gearbox Installation, page 17-54
Tie-rod Ball Joint Boot Replacement, page 17-57
Gearbox Mount Cushion Replacement, page 17-58

POWER STEERING FLUID RESERVOIR
Fluid Leakage Inspection, page 17-11
Fluid Replacement, page 17-14
Power Steering Hose, Line, and Pressure Switch Replacement, page 17-15

POWER STEERING PUMP
Pump Pressure Test with T/N 07406-0010001, page 17-9
Pump Pressure Test with T/N 07406-001000A, page 17-10
Pump Belt Inspection and Adjustment, page 17-12
Pump Replacement, page 17-16
Pump Overhaul, page 17-17