2003 Honda Civic LX - Fig. 93: Instrument Cluster Circuit, EX, HX, LX (1 of 2)

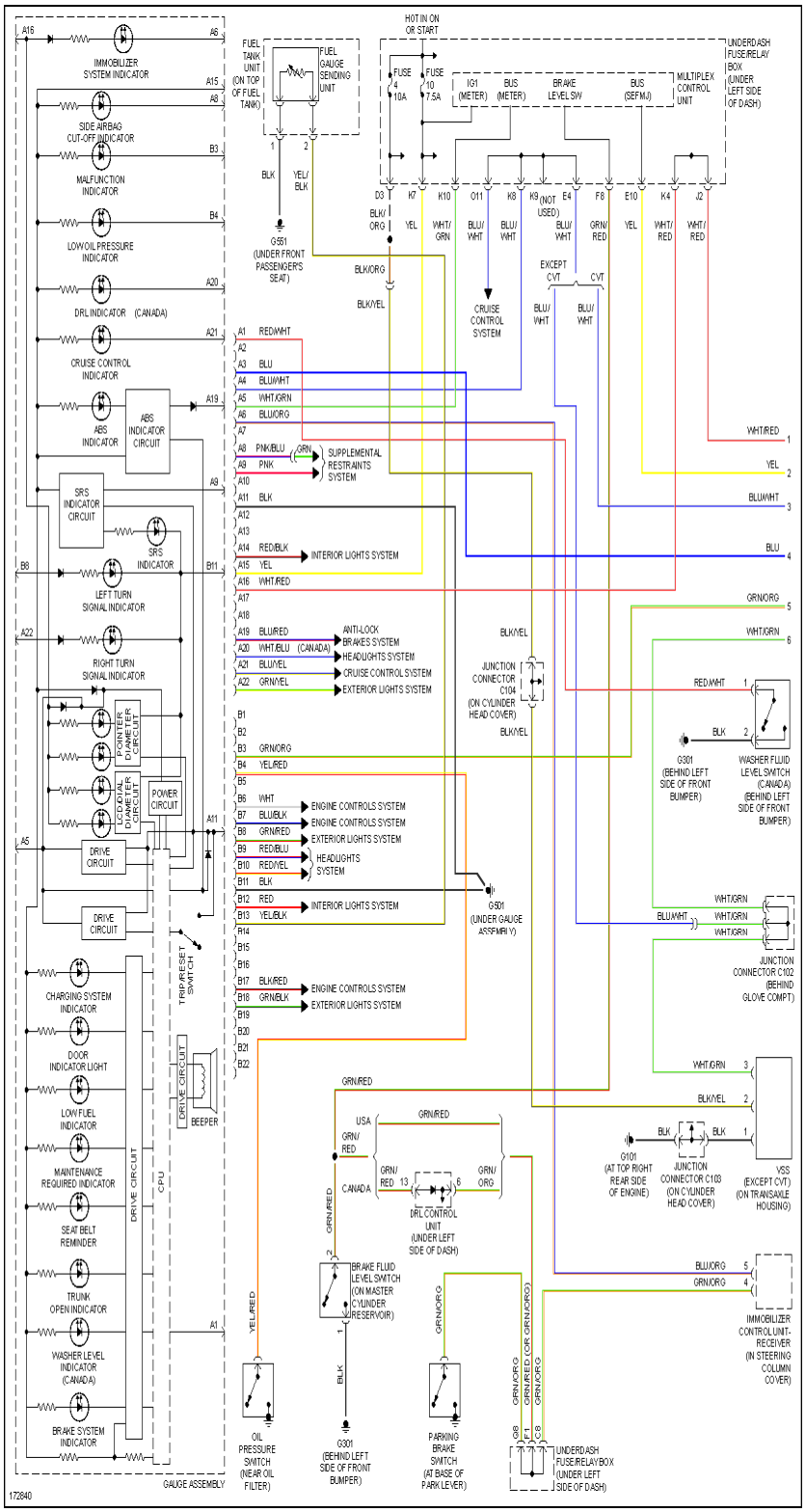

© 2006 Mitchell Repair Information Co., LLC.