Wiring Diagram
Air Conditioning
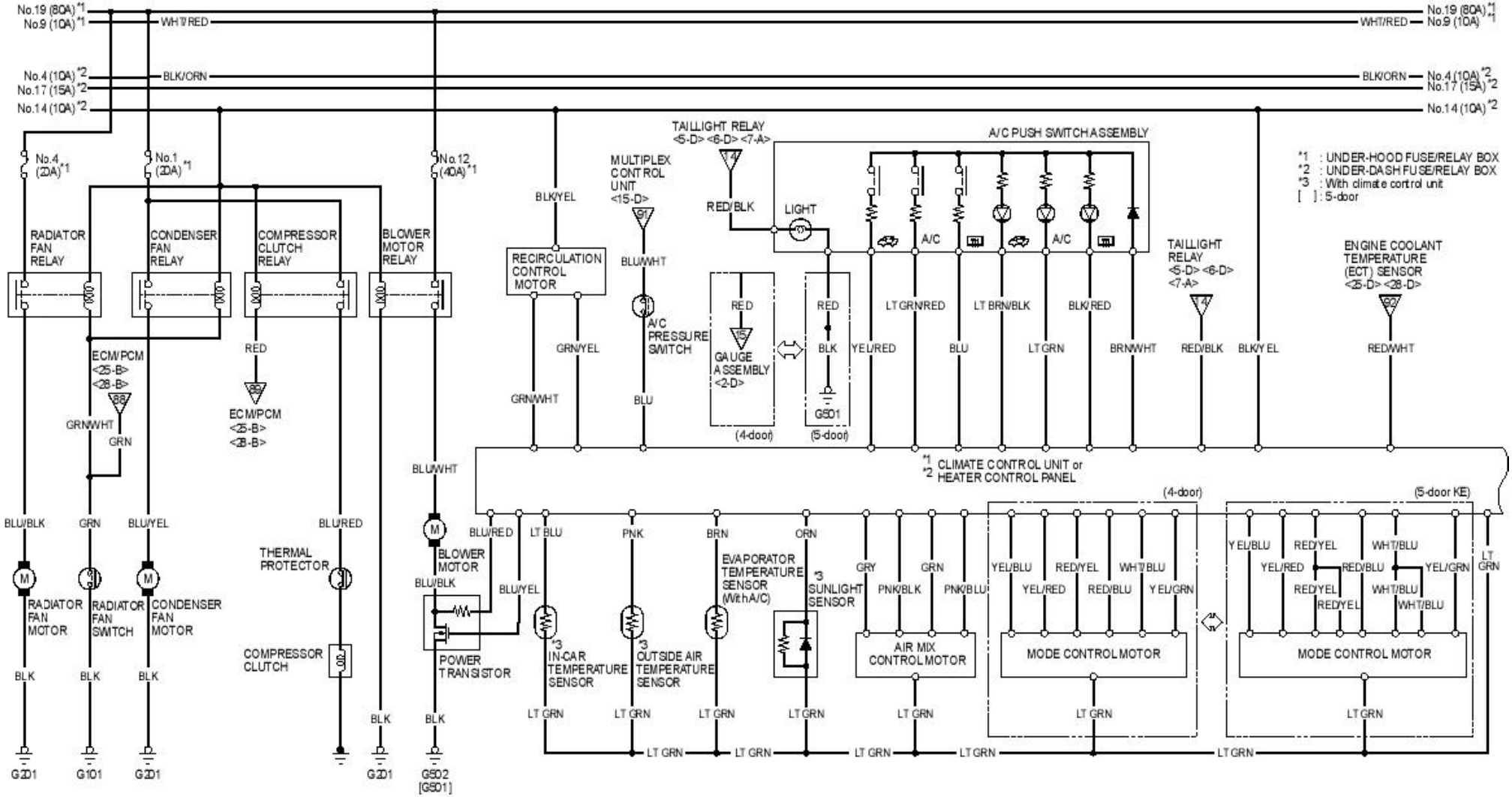
1-22